HT/ATEX

Roof mounted axial fans, with ATEX 2G or 2D certification and Ex db, Ex eb or Ex tb motor

Notified authority: LOM
Identification no.: LOM 03ATEX0157
Motor marking:
Ⓔx II 2G Ex db IIB T4 Gb
Ⓔx II 2G Ex eb IIB T3 Gb
Ⓔx II 2D Ex tb IIIC T135 °C Db

HT/ATEX-25...63

HT/ATEX-71...100

Roof mounted fans with flat base and ATEX 2G or 2D certification with flameproof Ex db, increased safety Ex eb or dust ignition proof Ex tb motor to work in explosive gas or dust atmospheres.

Fan:
- Support base in galvanised sheet steel painted with aluminum band in the impeller area according to EN 14986 standard.
- Cast aluminium impellers.
- Non-sparking cable gland included.
- Protection grid against contacts according to UNE-EN ISO 12499.
- Anti-rain deflector cap in painted galvanised sheet steel, with anti-corrosion protection.
- Airflow direction from motor to impeller.
- Standard marking with flameproof motor (Ex db): II 2G Ex h IIB T4 Gb.
- Standard marking with increased safety motor (Ex eb): II 2G Ex h IIB T3 Gb.
- Standard marking with motor for dust ignition proof (Ex tb): II 2D Ex h IIIC T135 °C Db.

Motor:
- Class F motors with ball bearings and ATEX certification flameproof Ex db, increased safety Ex eb or dust ignition proof Ex tb.
- Three-phase 230/400 V 50 Hz (up to 4 kW) and 400/690 V 50 Hz (powers greater than 4 kW).
- Working temperature: -20 °C +40 °C.

Finish:
- Anti-corrosive with ATEX paint, free of iron components, in polyester resin polymerized at 190 °C, after degreasing with phosphate-free nanotechnological treatment.

On request:
- Motors with built-in PTC.
- Special windings for different voltages and frequencies.
- ATEX construction for flammable dust.
- ATEX fan with greater protection than the standard marking.
- Fans with 2 speed motor.
- Ex db flameproof single-phase motors.

Order code

HT/ATEX — 100 — 4T — 7.5 / 2G Ex eb

- **HT/ATEX**: HT/ATEX: Roof mounted axial fans, with ATEX 2G or 2D certification and Ex db, Ex eb or Ex tb motor
- **100**: Impeller diameter in cm
- **4T**: Number of motor poles 4=1500 r/min 50 Hz 6=1000 r/min 50 Hz; T = Three-phase
- **7.5**: Motor power (HP)
- **2G Ex eb**: 2G Ex eb: for zone 1 and 2; 2G Ex db: for zone 1 and 2; 2D Ex tb: for zone 21 and 22

Technical characteristics

Model	Speed	Maximum admissible current (A)			Installed power	Maximum flow rate	Sound pressure level[1] dB (A)		Approx. weight
	(r/min)	230V	400V	690V	(kW)	(m³/h)	Inlet	Exhaust	(Kg)
HT/ATEX-25-4T	1320	0.65	0.38		0.09	1090	34	33	17
HT/ATEX-31-4T	1320	0.65	0.38		0.09	1815	40	39	20
HT/ATEX-35-4T	1320	0.65	0.38		0.09	2610	41	40	26
HT/ATEX-40-4T	1380	1.25	0.72		0.25	4615	44	43	28
HT/ATEX-45-4T	1370	2.60	1.50		0.37	6590	48	46	50
HT/ATEX-50-4T	1420	2.87	1.65		0.55	8620	52	50	63
HT/ATEX-56-4T	1410	3.81	2.20		0.75	9915	54	52	74
HT/ATEX-56-6T	910	2.42	1.40		0.25	6580	41	39	63

Technical characteristics

Model	Speed	Maximum admissible current (A)			Installed power	Maximum flow rate	Sound pressure level[1] dB (A)		Approx. weight
	(r/min)	230V	400V	690V	(kW)	(m^3/h)	Inlet	Exhaust	(Kg)
HT/ATEX-63-4T	1435	4.54	2.61		1.10	14030	56	54	91
HT/ATEX-63-6T	935	2.77	1.60		0.37	9250	45	43	94
HT/ATEX-71-4T	1400	6.93	4.00		1.50	18230	62	60	97
HT/ATEX-71-6T	930	3.46	2.00		0.55	12265	51	49	94
HT/ATEX-80-4T	1440	8.30	4.77		2.20	26205	65	63	155
HT/ATEX-80-6T	910	5.89	3.40		1.10	18260	56	54	181
HT/ATEX-90-4T	1445	11.27	6.48		3.00	31570	69	67	196
HT/ATEX-90-6T	940	7.62	4.40		1.50	21340	60	58	198
HT/ATEX-100-4T-7.5	1455		10.64	18.50	5.50	36755	72	70	256
HT/ATEX-100-4T-10	1460		14.39	25.03	7.50	44085	76	74	257
HT/ATEX-100-6T-2	940	7.62	4.40		1.50	25520	63	61	213
HT/ATEX-100-6T-3	940	9.35	5.40		2.20	28805	67	65	224

1. The noise level values are pressures in dB(A) measured at a distance of 10 metres in a free field.

Acoustic characteristics

The values given are obtained under laboratory conditions according to ISO 3744.

Sound power spectrum Lw(A) in dB(A) per Hz frequency band

Values measured at inlet with maximum flow rate

	63	125	250	500	1000	2000	4000	8000
HT/ATEX-25-4T	27	37	54	54	62	58	51	42
HT/ATEX-31-4T	33	43	60	60	68	64	57	48
HT/ATEX-35-4T	34	44	61	61	69	65	58	49
HT/ATEX-40-4T	28	45	57	65	70	70	66	59
HT/ATEX-45-4T	32	49	61	69	74	74	70	63
HT/ATEX-50-4T	36	53	65	73	78	78	74	67
HT/ATEX-56-4T	38	55	67	75	80	80	76	69
HT/ATEX-56-6T	25	42	54	62	67	67	63	56
HT/ATEX-63-4T	40	57	69	77	82	82	78	71
HT/ATEX-63-6T	29	46	58	66	71	71	67	60
HT/ATEX-71-4T	46	63	75	83	88	88	84	77
HT/ATEX-71-6T	35	52	64	72	77	77	73	66
HT/ATEX-80-4T	57	78	85	90	93	89	82	71
HT/ATEX-80-6T	48	69	76	81	84	80	73	62
HT/ATEX-90-4T	61	82	89	94	97	93	86	75
HT/ATEX-90-6T	52	73	80	85	88	84	77	66
HT/ATEX-100-4T-7.5	64	85	92	97	100	96	89	78
HT/ATEX-100-4T-10	68	89	96	101	104	100	93	82
HT/ATEX-100-6T-2	55	76	83	88	91	87	80	69
HT/ATEX-100-6T-3	59	80	87	92	95	91	84	73

Values measured at exhaust with maximum flow rate

	63	125	250	500	1000	2000	4000	8000
HT/ATEX-25-4T	26	36	53	53	61	57	50	41
HT/ATEX-31-4T	32	42	59	59	67	63	56	47
HT/ATEX-35-4T	33	43	60	60	68	64	57	48
HT/ATEX-40-4T	27	44	56	64	69	69	65	58
HT/ATEX-45-4T	30	47	59	67	72	72	68	61
HT/ATEX-50-4T	34	51	63	71	76	76	72	65
HT/ATEX-56-4T	36	53	65	73	78	78	74	67
HT/ATEX-56-6T	23	40	52	60	65	65	61	54
HT/ATEX-63-4T	38	55	67	75	80	80	76	69
HT/ATEX-63-6T	27	44	56	64	69	69	65	58
HT/ATEX-71-4T	44	61	73	81	86	86	82	75
HT/ATEX-71-6T	33	50	62	70	75	75	71	64
HT/ATEX-80-4T	55	76	83	88	91	87	80	69
HT/ATEX-80-6T	46	67	74	79	82	78	71	60
HT/ATEX-90-4T	59	80	87	92	95	91	84	73
HT/ATEX-90-6T	50	71	78	83	86	82	75	64
HT/ATEX-100-4T-7.5	62	83	90	95	98	94	87	76
HT/ATEX-100-4T-10	66	87	94	99	102	98	91	80
HT/ATEX-100-6T-2	53	74	81	86	89	85	78	67
HT/ATEX-100-6T-3	57	78	85	90	93	89	82	71

Dimensions mm

HT/ATEX-25…63

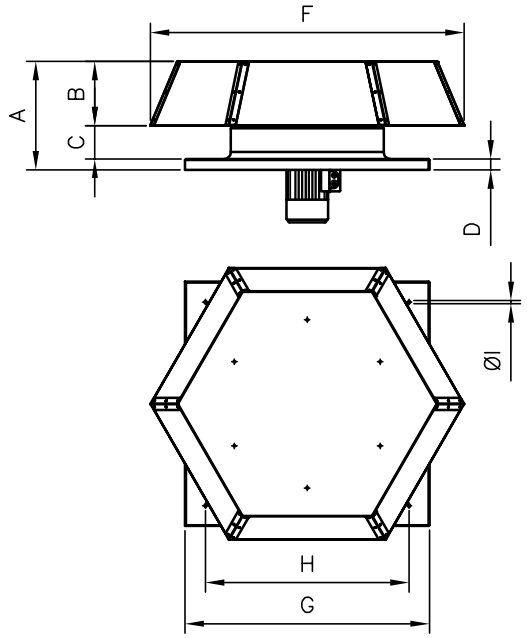

	A	B	C	D	F	G	H	ØI
HT/ATEX-25	223	140	43	40	635	450	360	12
HT/ATEX-31	245	140	65	40	635	500	410	12
HT/ATEX-35	270	169	61	40	700	560	450	12
HT/ATEX-40	295	169	86	40	700	630	530	12
HT/ATEX-45	342	202	90	50	924	710	590	12
HT/ATEX-50	373	238	85	50	1156	800	680	12
HT/ATEX-56	402	238	124	40	1156	900	750	14
HT/ATEX-63	457	277	141	40	1385	1000	850	14

HT/ATEX-71…100

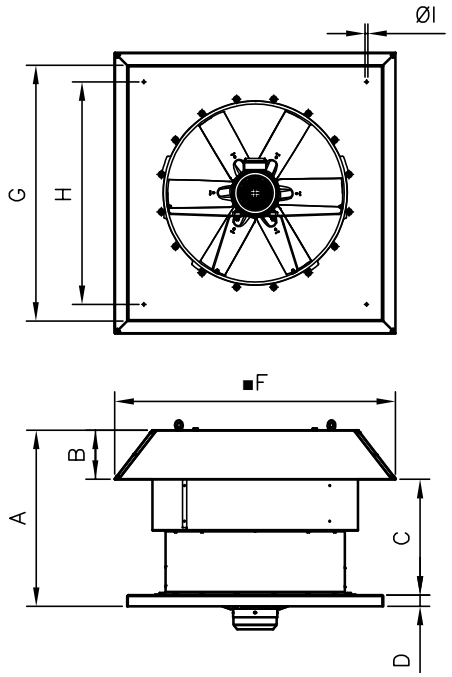

	A	B	C	D	F	G	H	ØI
HT/ATEX-71	759	195	524	40	1123	1000	850	14
HT/ATEX-80	790	215	524	50	1249	1150	1000	14
HT/ATEX-90	919	231	638	50	1380	1150	1000	14
HT/ATEX-100	1054	255	749	50	1530	1250	1100	14

Characteristic curves

Q= Flow rate in m³/h, m³/s and cfm Pe= Static pressure in mm H_2O, Pa and inwg

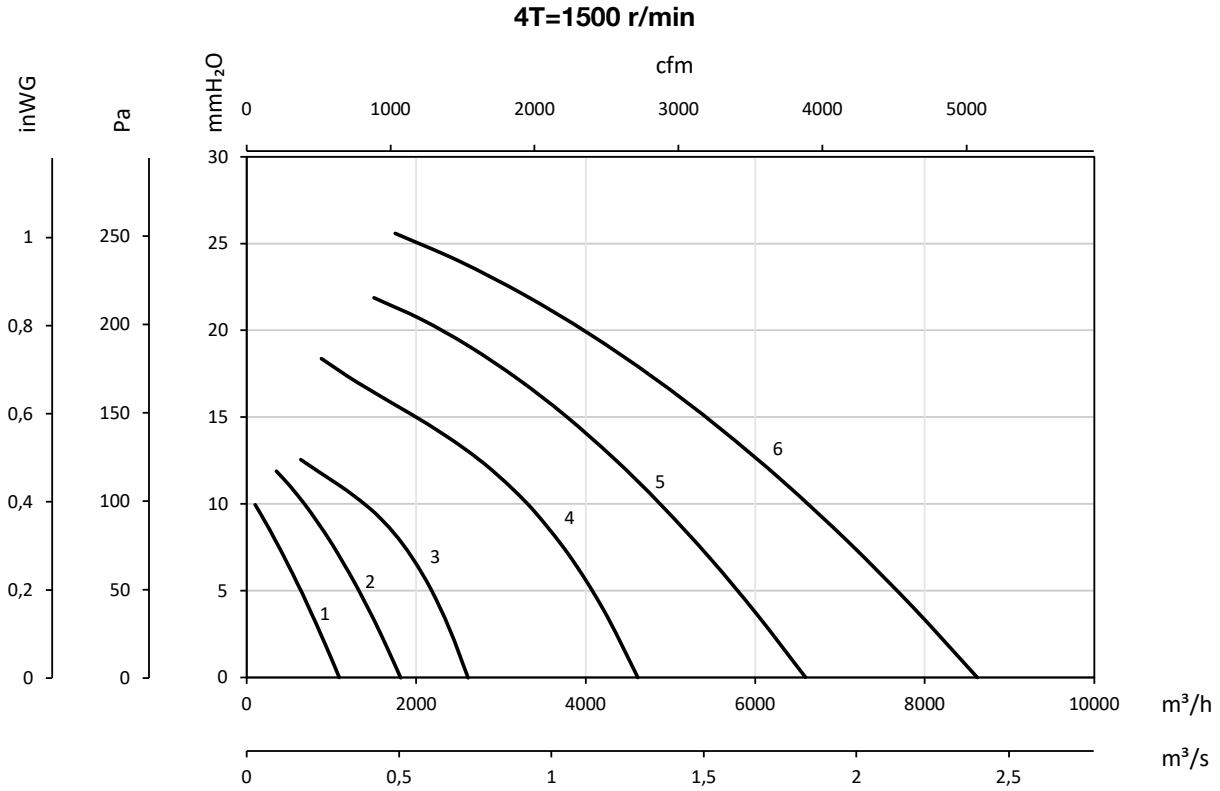

1 : HT/ATEX-25-4T
2 : HT/ATEX-31-4T
3 : HT/ATEX-35-4T
4 : HT/ATEX-40-4T
5 : HT/ATEX-45-4T
6 : HT/ATEX-50-4T

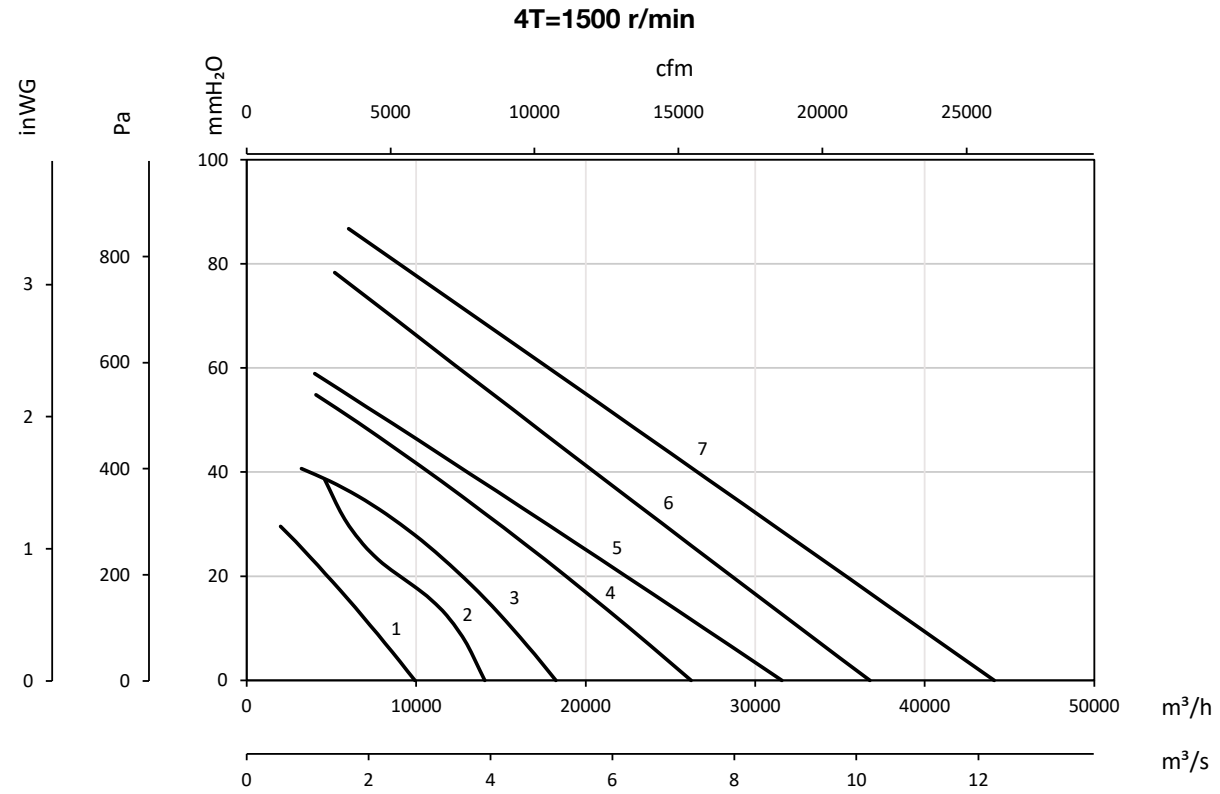

1 : HT/ATEX-56-4T
2 : HT/ATEX-63-4T
3 : HT/ATEX-71-4T
4 : HT/ATEX-80-4T
5 : HT/ATEX-90-4T
6 : HT/ATEX-100-4T-7.5
7 : HT/ATEX-100-4T-10

Characteristic curves

Q= Flow rate in m³/h, m³/s and cfm Pe= Static pressure in mm H_2O, Pa and inwg

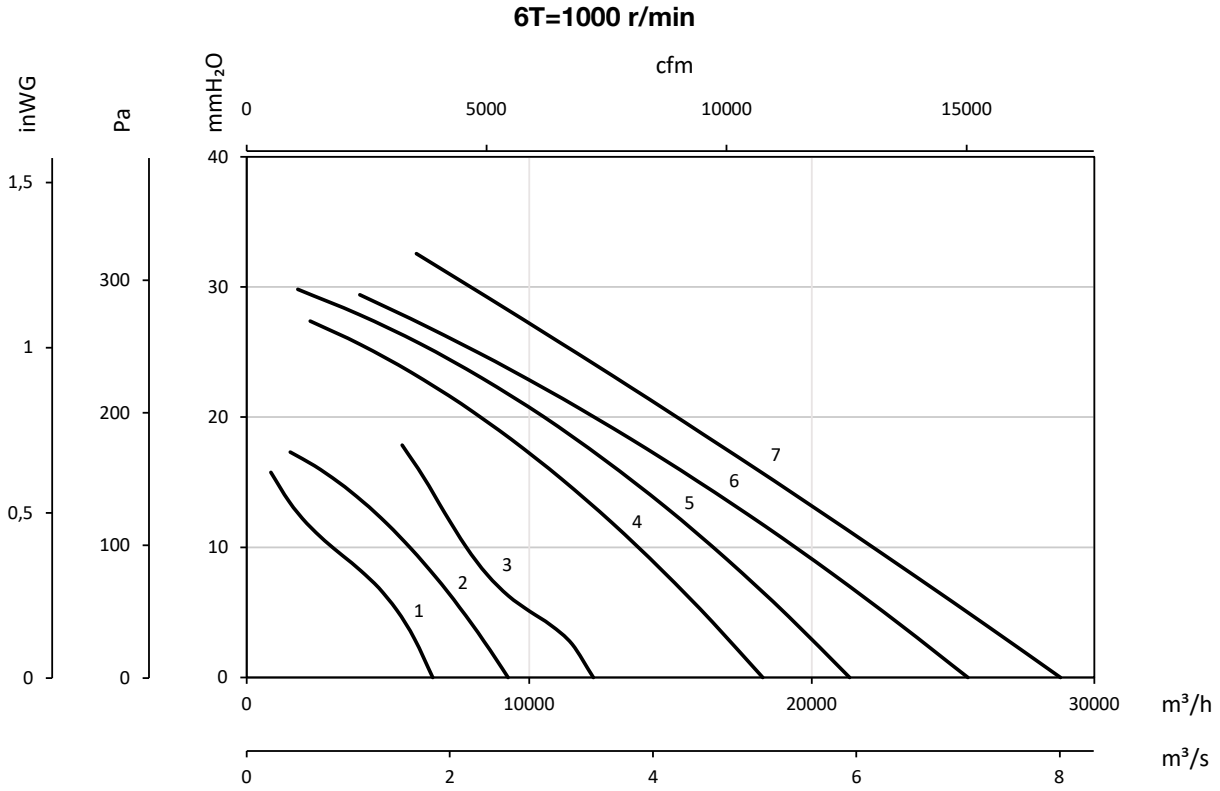

1 : HT/ATEX-56-6T
2 : HT/ATEX-63-6T
3 : HT/ATEX-71-6T
4 : HT/ATEX-80-6T
5 : HT/ATEX-90-6T
6 : HT/ATEX-100-6T-2
7 : HT/ATEX-100-6T-3

Accessories


INT/ATEX


R


PV


BTUB


BAC


MS


PA


BS


BSS


PT


OP


S